ISE-15

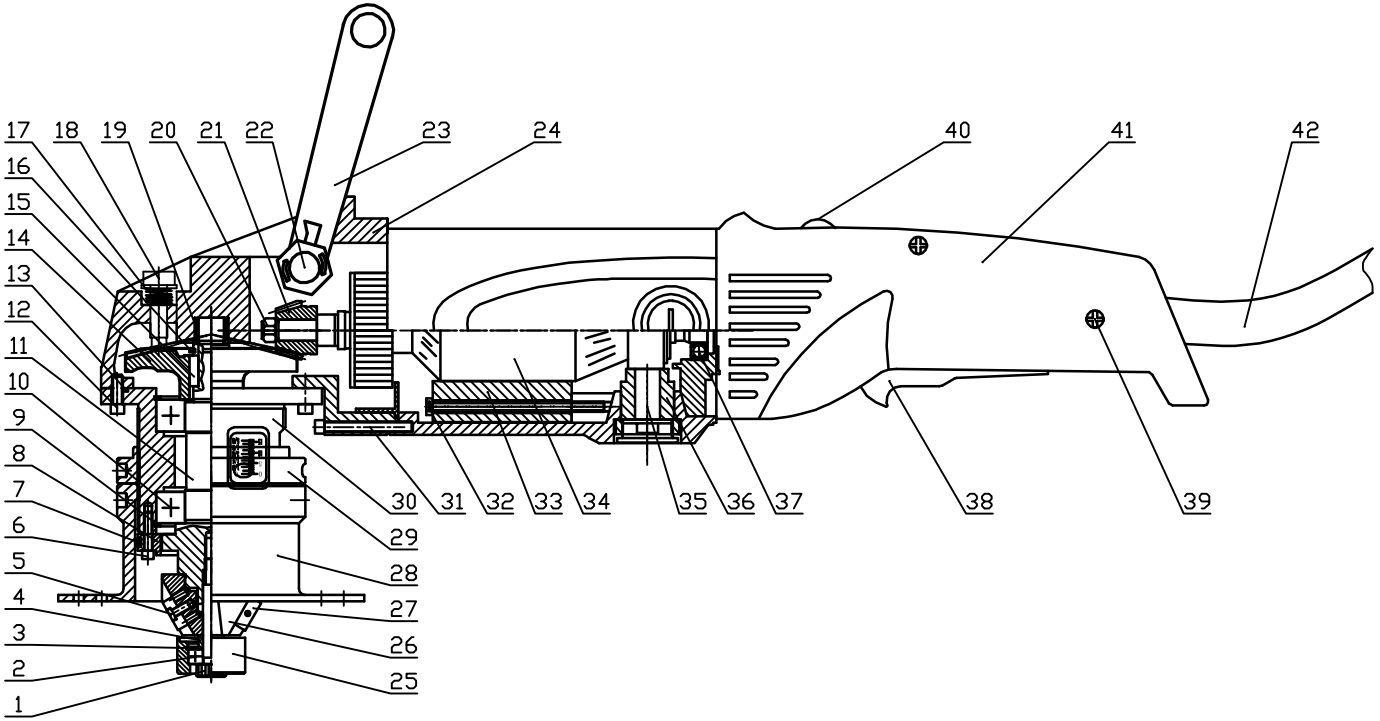


| Item | Description | Qty | Item | Description | Qty | Item | Description | Qty |
|---|---|---|---|---|---|---|---|---|
| 1 | Locking pin | 1 | 15 | Key | 1 | 29 | Locking ring | 1 |
| 2 | Deep groove ball bearing | 1 | 16 | Circlip | 5 | 30 | Positioning device | 1 |
| 3 | Circlip | 1 | 17 | Spring | 1 | 31 | Screw | 4 |
| 4 | Washer | 1 | 18 | Locking device | 1 | 32 | Motor screw | 2 |
| 5 | Screw | 5 | 19 | Needle bearing | 1 | 33 | Stator | 1 |
| 6 | Allen screw | 4 | 20 | Cap | 1 | 34 | Rotor | 1 |
| 7 | O ring | 1 | 21 | Driving gear | 1 | 35 | Carbon brush | 2 |
| 8 | Gland | 1 | 22 | Screw | 2 | 36 | Carbon bush holder | 2 |
| 9 | Circlip | 2 | 23 | Handle | 1 | 37 | Deep groove ball bearing | 1 |
| 10 | Deep groove ball bearing | 2 | 24 | Housing | 1 | 38 | On/off switch | 1 |
| 11 | Axis of revolution | 1 | 25 | Guide wheel | 1 | 39 | Screw | 4 |
| 12 | Allen screw | 4 | 26 | Tool head | 1 | 40 | Speed adjust wheel | 1 |
| 13 | O ring | 1 | 27 | Carbide inserts | 1 | 41 | Motor housing | 1 |
| 14 | Bevel gear | 1 | 28 | Guide plate | 1 | 42 | Cable | 1 |

借(通)用件登记

描图

描校

旧底图总号

底图总号

签字

日期

| | | | | | | | | |
|---|---|---|---|---|---|---|---|---|
| ?? | ?? | ? ? | ????? | ?? | ? ? ? | | | Nodha |
| ?? | | | ??? | | | ? ? ? ? | ?? ?? | Assembly |
| ?? | | | | | | | 1:1 | ISE-15 |
| ?? | | | ?? | | | ? ? ? ? | | |